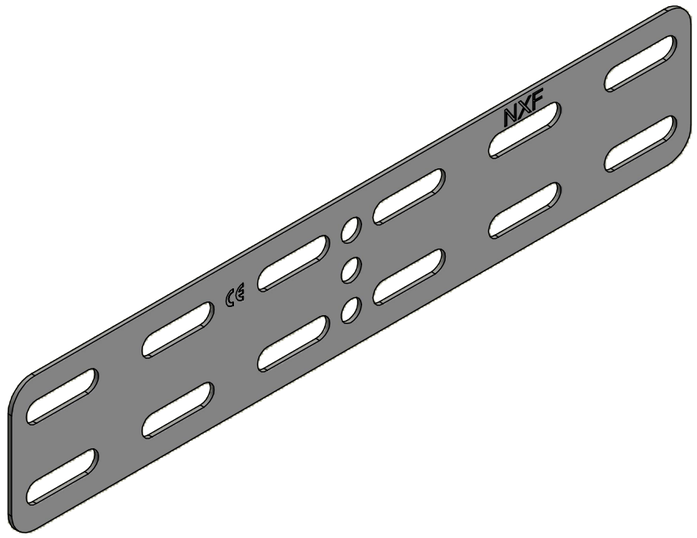

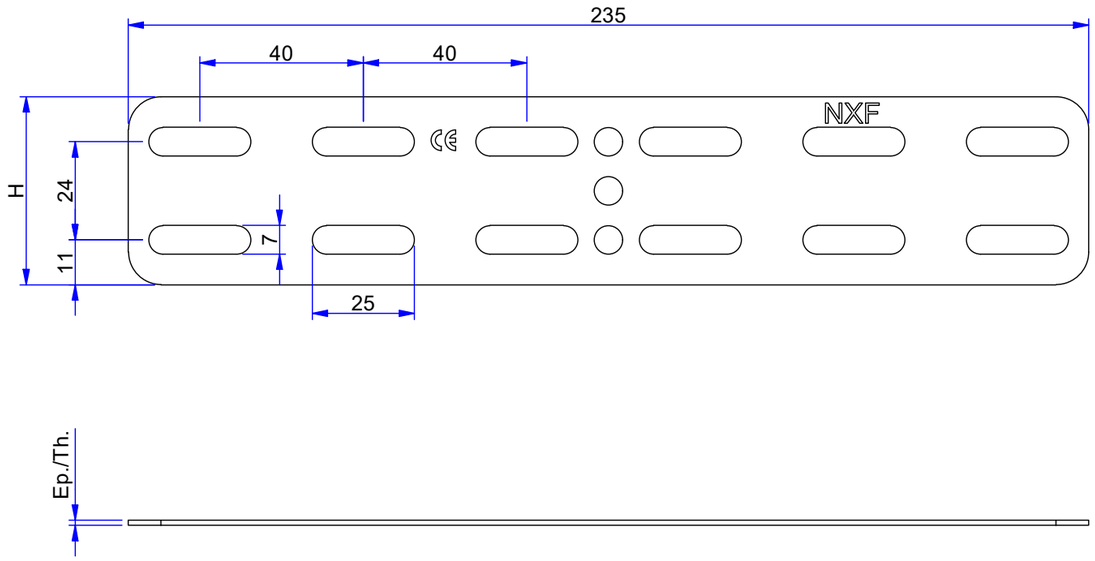

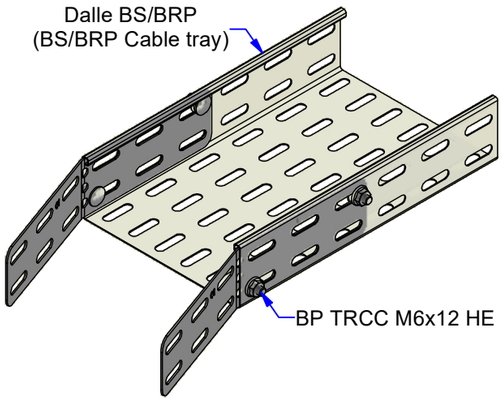

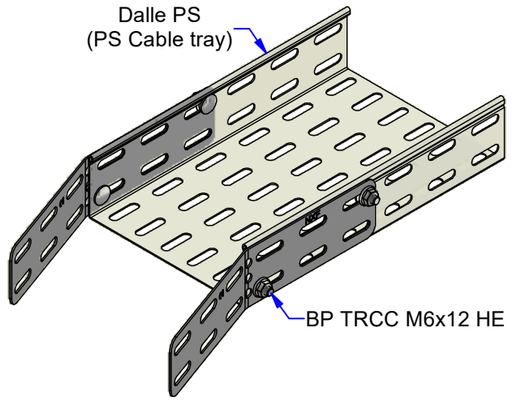

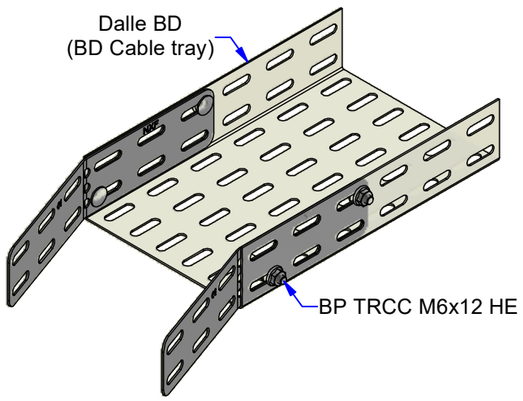

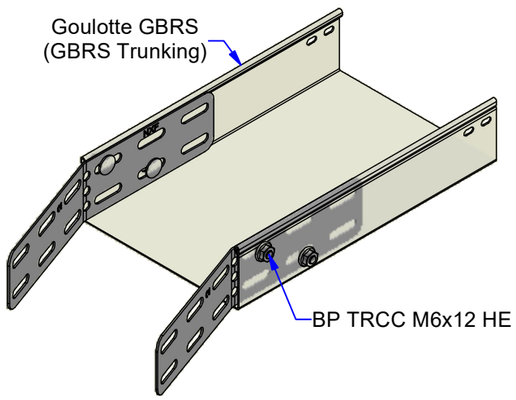

Description	Code	Masse/Weight Kg/p	Ep./Th. mm	H mm
ED 48 316L	410016	0,069	1,00	46

SS316L : Stainless steel according to NF EN 10088-2 (316L).
316 L : Acier inoxydable X2CrNiMo 17-12-2 NF EN 10088-2.

www.niedaxfrance.fr

ECLISSE PLIABLE ED 48 316L
ED BENDABLE COUPLER 48 SS316L

ASSISTANCE TECHNIQUE
+33 (0)1 55 95 92 17
pole.technique@niedax.fr

FT03565

NIEDAX